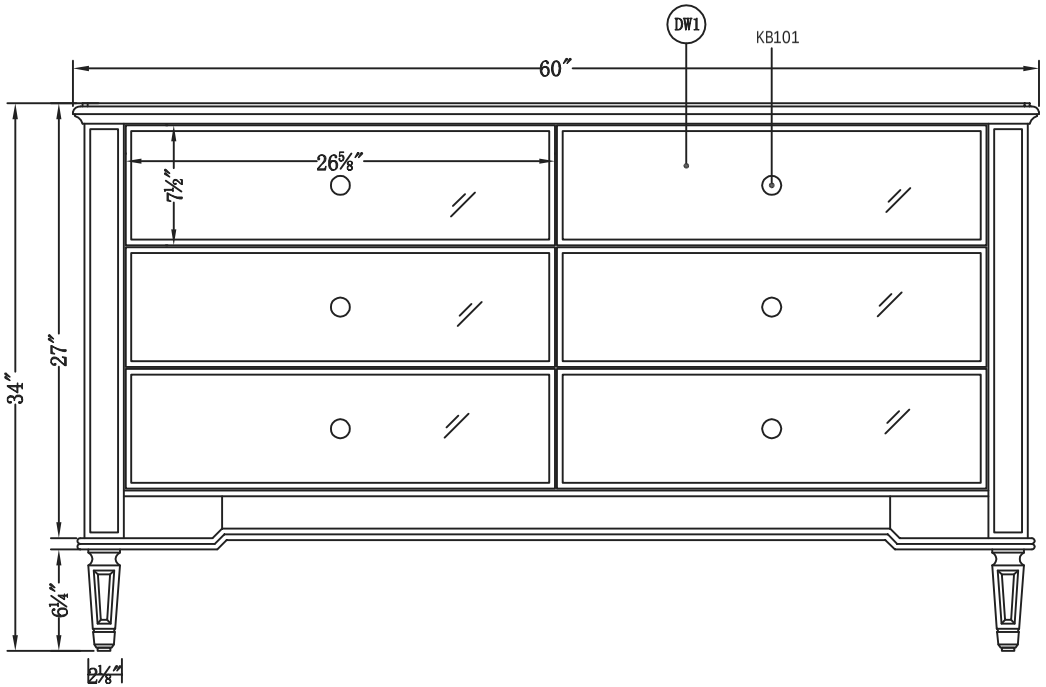

Front view

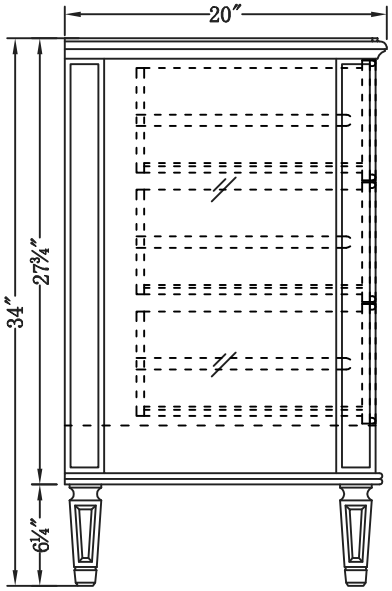

Side view

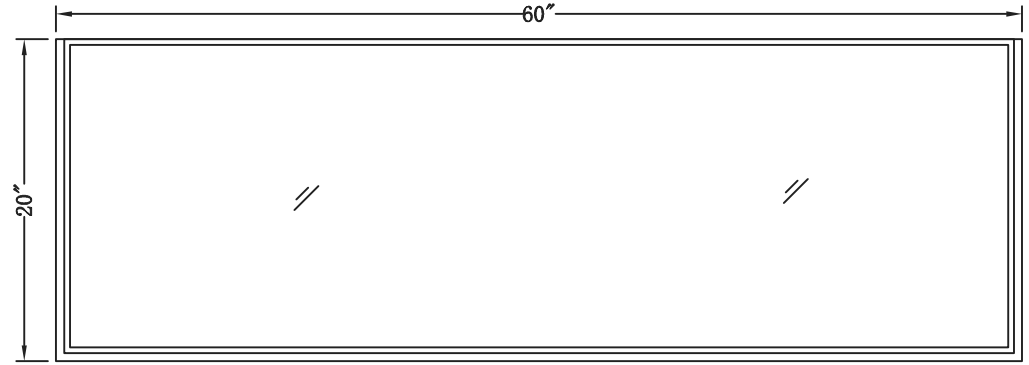

Top view

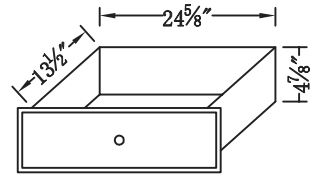

Drawer Interior Size

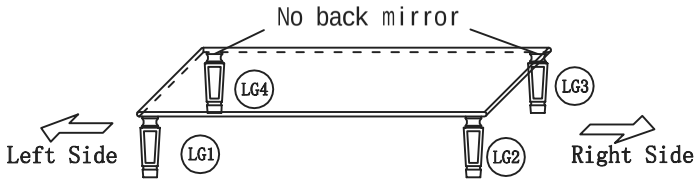

KD leg orientation diagram

DWG. NO.	
MODEL NO:	MF6-1136G
SPEC NO:	
QUANTITY:	
DATE:	
CHECKED BY:	
FOR PROPOSAL ONLY ALL DIMENSIONS TO BE VERIDIED	
PROJECT:	
COLOR:	
FINISH:	
REVISIONS	
1	
2	
3	
4	
5	
6	

ELEGANT
FURNITURE & LIGHTING™

500-550 E. Erie Avenue
Philadelphia PA 19134
1-888-388-3390

Model#	MF6-1136G	Number of Doors	0	Table: seating capacity	N/A	felt lined drawers	NO	cabinet interior height	N/A
Finish	Antique gold paint	Finished Back	Yes	upholstery color	N/A	drawer glide extension	NO	cabinet interior width	N/A
Hand Painted	Yes	Hardware finish	Brushed steel finish	upholstery pattern	N/A	drawer glide material	WOOD	cabinet interior depth	N/A
Mirror type	Clear mirror	Assembly	Yes, legs	cushion material	N/A	drawer dividers	NO	leg height	6-1/2"
Beveled glass	Yes	Product Width(")	60"	base finish	Antique gold paint	Drawer Interior finish	gold	leg width	2"
Frame material	Solid wood and MDF	Product Depth(")	20"	powder coated finish	NO	Ball Bearing Glides	NO	leg depth	2"
Solid wood construction	Solid wood legs	Product Height(")	34"	base material	MDF	soft close drawer glides	NO	glass finish	Clear
Drawers Included	YES	Package LENGTH (")	64.25"	top material	Mirror	Number of cabinets	0	stackable	NO
Number of Drawers	6	Packaged WIDTH(")	24.25"	wood species	Rubberwood	shelf height	N/A	leg design	Squared legs
Joinery Type	SOUARE ENDED BUTT JOINT	Packaged HEIGHT(")	32.25"	tip over restraint strap	N/A	shelf width	N/A	Armoires: ring slots	N/A
Drawer railing	Wood	Package Weight(lbs)	189.2	shape of top	Rectangle	shelf depth	N/A	Armoires: hooks	N/A
Drawer Width(")	26-1/2"	Product Weight(lbs)	160.16	lift top	N/A	Shelf thickness	N/A	armoires: mirror dimensions	N/A
Drawer Depth(")	16	Shipping Type	LTL	shelf material	N/A	Any certificatio n?	NO	door thickness	N/A
Drawer Height(")	7-1/2"	table top width	20"	adjustable shelves	NO	California Proposition 65 warning required	YES	false drawers?	N/A
Shelves	NO	table top finish	Clear mirror	Drawer Handle designs	Knobs	Drawers Interior Height	4-7/8"	sink type	N/A
Number of Shelves	0	glass top tempered	NO	Door Knob Model	KB101	Drawer Interior Width	24-5/8"	# of faucet holes	N/A
Doors included	NO	table top maximum weight	66LBS	saftey stop	YES	Drawer Interior Depth	13-1/2"		

DWG. NO.

MODEL NO: MF6-1136G

SPEC NO:

QUANTITY:

DATE:

CHECKED BY:

FOR PROPOSAL ONLY ALL DIMENSIONS TO BE VERIDIED

PROJECT:

COLOR:

FINISH:

REVISIONS

1	
2	
3	
4	
5	
6	

ELEGANT FURNITURE & LIGHTING™

500-550 E. Erie Avenue

Philadelphia PA 19134

1-888-388-3390